Robo War Table

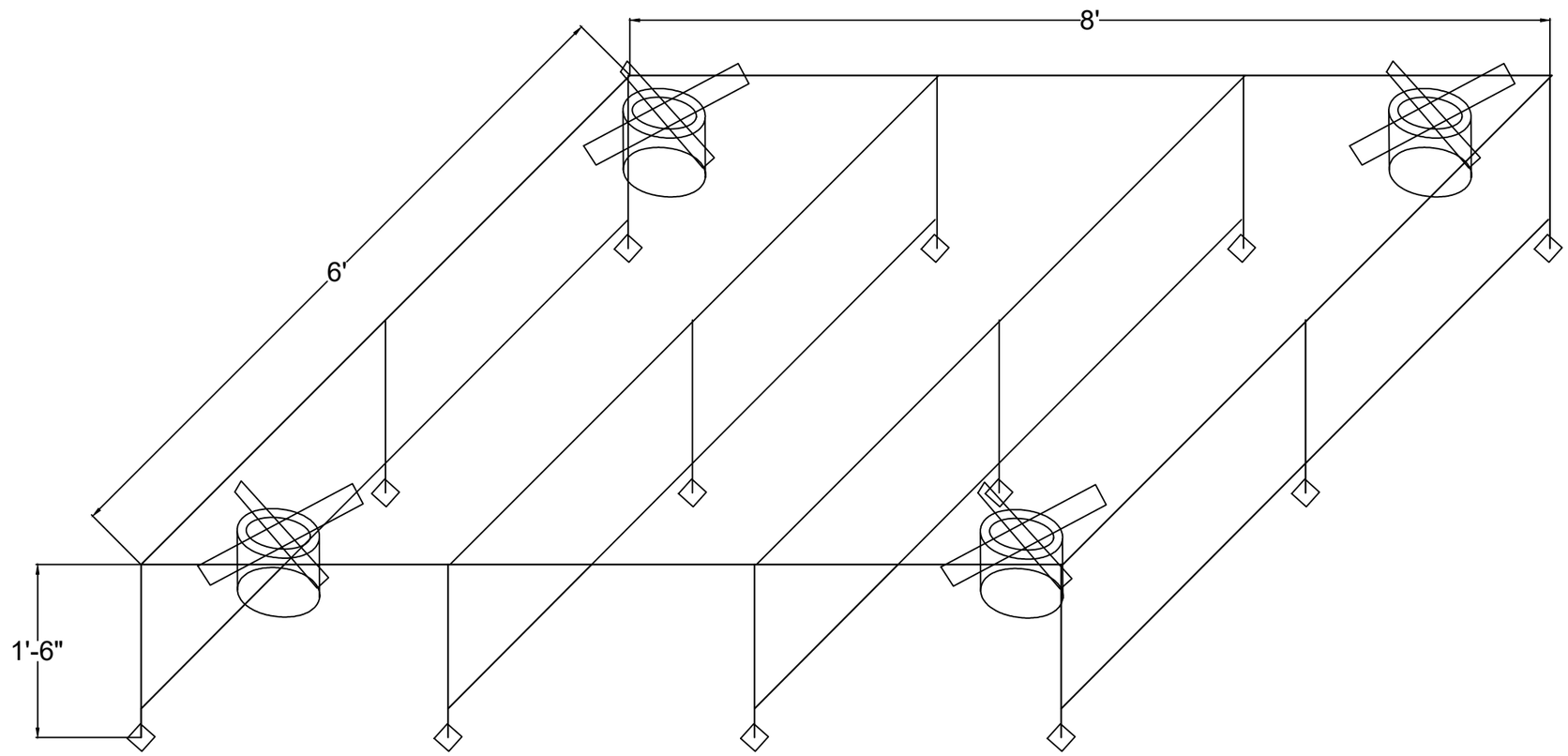

Material Required :

1. Plane Sheet (20 gaze) 8' x 4' = 2 pc
2. Angle (25 x 25 x 5 mm) = 40'
3. 1" Square Pipe (medium) = 60'
4. Flat (25 x 3 mm) = 40'
5. Nut Bolt + washer = 16 pc
6. Motor = 4pc
7. Wire (1.5 mm) = 20 Meters